USB2227/USB2228

4th Generation USB 2.0 Flash Media Controller with Integrated Card Power FETs

PRODUCT FEATURES

Data Brief

- Complete System Solution for interfacing SmartMedia™ (SM) or xD Picture Card™ (xD)[1], Memory Stick™ (MS), High Speed Memory Stick (HSMS), Memory Stick PRO (MSPRO), MS Duo™, Secure Digital (SD), Mini-Secure Digital (Mini-SD), TransFlash (SD), MultiMediaCard™ (MMC), Reduced Size MultiMediaCard (RS-MMC), NAND Flash, Compact Flash™ (CF) and CF Ultra™ I & II, and CF form-factor ATA hard drives to USB 2.0 bus
  - Supports USB Bulk Only Mass Storage Compliant Bootable BIOS
- Support for simultaneous operation of all above devices. (only one at a time of each of the following groups supported: CF or ATA drive, SM or XD or NAND, SD or MMC)
- On-Chip 4-Bit High Speed Memory Stick and MS PRO Hardware Circuitry
- On-Chip firmware reads and writes High Speed Memory Stick and MS PRO
- 1-bit ECC correction performed in hardware for maximum efficiency
- Hardware support for SD Security Command Extensions
- On-chip power FETs for supplying flash media card power with minimum board components
- USB Bus Power Certified
- 3.3 Volt I/O with 5V input tolerance on VBUS/GPIO3
- Complete USB Specification 2.0 Compatibility for Bus Powered Operation
  - Includes USB 2.0 Transceiver
  - A Bi-directional Control and a Bi-directional Bulk Endpoint are provided.
- 8051 8 bit microprocessor
  - Provides low speed control functions
  - 30 Mhz execution speed at 4 cycles per instruction average
  - 12K Bytes of internal SRAM for general purpose scratchpad
  - 768 Bytes of internal SRAM for general purpose scratchpad or program execution while re-flashing external ROM
- Double Buffered Bulk Endpoint
  - Bi-directional 512 Byte Buffer for Bulk Endpoint
  - 64 Byte RX Control Endpoint Buffer
  - 64 Byte TX Control Endpoint Buffer
- Internal or External Program Memory Interface
  - 64K Byte Internal Code Space or Optional 64K Byte External Code Space using Flash, SRAM or EPROM memory.
- On Board 24Mhz Crystal Driver Circuit
- Can be clocked by 48MHz external source
- On-Chip 1.8V Regulator for Low Power Core Operation
- Internal PLL for 480Mhz USB 2.0 Sampling, Configurable MCU clock
- Supports firmware upgrade via USB bus if “boot block” Flash program memory is used
- 15 GPIOs for special function use: LED indicators, button inputs, power control to memory devices, etc.
  - Inputs capable of generating interrupts with either edge sensitivity
  - Attribute bit controlled features:
  - Activity LED polarity/operation/blink rate
  - Full or Partial Card compliance checking
  - Bus or Self Powered
  - LUN configuration and assignment
  - Write Protect Polarity
  - SmartDetach™ Detach from USB when no Card Inserted for Notebook apps
  - Cover Switch operation for xD compliance
  - Inquiry Command operation
  - SD Write Protect operation
  - Older CF card support
  - Force USB 1.1 reporting
  - Internal or External Power FET operation
- Compatible with Microsoft WinXP, WinME, Win2K SP3, Apple OS10, Softconnex, and Linux Multi-LUN Mass Storage Class Drivers
- Win2K, Win98/98SE and Apple OS8.6 and OS9 Multi-LUN Mass Storage Class Drivers available from SMSC
- 128 Pin VTQFP Lead-free RoHS Compliant Package (1.0mm height, 14mm x14mm footprint)

1.xD Picture Card not applicable to USB2227

ORDER NUMBER(S):

USB2227/USB2228-NU-XX FOR 128 PIN, VTQFP LEAD-FREE ROHS COMPLIANT PACKAGE

80 ARKAY DRIVE, HAUPPAUGE, NY 11788 (631) 435-6000, FAX (631) 273-3123

Copyright © 2007 SMSC or its subsidiaries. All rights reserved.

Circuit diagrams and other information relating to SMSC products are included as a means of illustrating typical applications. Consequently, complete information sufficient for construction purposes is not necessarily given. Although the information has been checked and is believed to be accurate, no responsibility is assumed for inaccuracies. SMSC reserves the right to make changes to specifications and product descriptions at any time without notice. Contact your local SMSC sales office to obtain the latest specifications before placing your product order. The provision of this information does not convey to the purchaser of the described semiconductor devices any licenses under any patent rights or other intellectual property rights of SMSC or others. All sales are expressly conditional on your agreement to the terms and conditions of the most recently dated version of SMSC's standard Terms of Sale Agreement dated before the date of your order (the "Terms of Sale Agreement"). The product may contain design defects or errors known as anomalies which may cause the product's functions to deviate from published specifications. Anomaly sheets are available upon request. SMSC products are not designed, intended, authorized or warranted for use in any life support or other application where product failure could cause or contribute to personal injury or severe property damage. Any and all such uses without prior written approval of an Officer of SMSC and further testing and/or modification will be fully at the risk of the customer. Copies of this document or other SMSC literature, as well as the Terms of Sale Agreement, may be obtained by visiting SMSC's website at http://www.smsc.com. SMSC is a registered trademark of Standard Microsystems Corporation ("SMSC"). Product names and company names are the trademarks of their respective holders.

SMSC DISCLAIMS AND EXCLUDES ANY AND ALL WARRANTIES, INCLUDING WITHOUT LIMITATION ANY AND ALL IMPLIED WARRANTIES OF MERCHANTABILITY, FITNESS FOR A PARTICULAR PURPOSE, TITLE, AND AGAINST INFRINGEMENT AND THE LIKE, AND ANY AND ALL WARRANTIES ARISING FROM ANY COURSE OF DEALING OR USAGE OF TRADE. IN NO EVENT SHALL SMSC BE LIABLE FOR ANY DIRECT, INCIDENTAL, INDIRECT, SPECIAL, PUNITIVE, OR CONSEQUENTIAL DAMAGES; OR FOR LOST DATA, PROFITS, SAVINGS OR REVENUES OF ANY KIND; REGARDLESS OF THE FORM OF ACTION, WHETHER BASED ON CONTRACT; TORT; NEGLIGENCE OF SMSC OR OTHERS; STRICT LIABILITY; BREACH OF WARRANTY; OR OTHERWISE; WHETHER OR NOT ANY REMEDY OF BUYER IS HELD TO HAVE FAILED OF ITS ESSENTIAL PURPOSE, AND WHETHER OR NOT SMSC HAS BEEN ADVISED OF THE POSSIBILITY OF SUCH DAMAGES.

General Description

The USB2227/USB2228 is a USB 2.0 Bulk Only Mass Storage Class Peripheral Controller intended for supporting CompactFlash (CF and CF Ultra I/II) in True IDE Mode only, SmartMedia (SM) and XD cards, Memory Stick (MS), Memory Stick DUO (MSDUO) and Memory Stick Pro (MSPRO), Secure Digital (SD), and MultiMediaCard (MMC) flash memory devices. It provides a single chip solution for the most popular flash memory cards in the market.

The device consists of a USB 2.0 PHY and SIE, buffers, Fast 8051 microprocessor with expanded scratchpad, and program SRAM, and CF, MS, SM and SD controllers. The SD controller supports both SD and MMC devices. SM controller supports both SM and xD cards.

Provisions for external Flash Memory up to 64K bytes for program storage is provided.

12K bytes of scratchpad SRAM and 768 Bytes of program SRAM are also provided.

Fifteen GPIO pins are provided for indicators, external serial EEPROM for OEM id and system configuration information, and other special functions.

Internal power FETs are provided to directly supply power to the xD/SM, MMC/SD and MS/MSPro cards.

The internal ROM program is capable of implementing any combination of single or multi-LUN CF/SD/MMC/SM/MS reader functions with individual card power control and activity indication. SMSC also provides licenses** for Win98 and Win2K drivers and setup utilities. Note: Please check with SMSC for precise features and capabilities for the current ROM code release.

*Note: In order to develop, make, use, or sell readers and/or other products using or incorporating any of the SMSC devices made the subject of this document or to use related SMSC software programs, technical information and licenses under patent and other intellectual property rights from or through various persons or entities, including without limitation media standard companies, forums, and associations, and other patent holders may be required. These media standard companies, forums, and associations include without limitation the following: Sony Corporation (Memory Stick, Memory Stick Pro); SD3 LLC (Secure Digital); MultiMedia Card Association (MultiMediaCard); the SSFDC Forum (SmartMedia); the Compact Flash Association (Compact Flash); and Fuji Photo Film Co., Ltd., Olympus Optical Co., Ltd., and Toshiba Corporation (xD-Picture Card). SMSC does not make such licenses or technical information available; does not promise or represent that any such licenses or technical information will actually be obtainable from or through the various persons or entities (including the media standard companies, forums, and associations), or with respect to the terms under which they may be made available; and is not responsible for the accuracy or sufficiency of, or otherwise with respect to, any such technical information.
SMSC's obligations (if any) under the Terms of Sale Agreement, or any other agreement with any customer, or otherwise, with respect to infringement, including without limitation any obligations to defend or settle claims, to reimburse for costs, or to pay damages, shall not apply to any of the devices made the subject of this document or any software programs related to any of such devices, or to any combinations involving any of them, with respect to infringement or claimed infringement of any existing or future patents related to solid state disk or other flash memory technology or applications ("Solid State Disk Patents"). By making any purchase of any of the devices made the subject of this document, the customer represents, warrants, and agrees that it has obtained all necessary licenses under then-existing Solid State Disk Patents for the manufacture, use and sale of solid state disk and other flash memory products and that the customer will timely obtain at no cost or expense to SMSC all necessary licenses under Solid State Disk Patents; that the manufacture and testing by or for SMSC of the units of any of the devices made the subject of this document which may be sold to the customer, and any sale by SMSC of such units to the customer, are valid exercises of the customer's rights and licenses under such Solid State Disk Patents; that SMSC shall have no obligation for royalties or otherwise under any Solid State Disk Patents by reason of any such manufacture, use, or sale of such units; and that SMSC shall have no obligation for any costs or expenses related to the customer's obtaining or having obtained rights or licenses under any Solid State Disk Patents.

SMSC MAKES NO WARRANTIES, EXPRESS, IMPLIED, OR STATUTORY, IN REGARD TO INFRINGEMENT OR OTHER VIOLATION OF INTELLECTUAL PROPERTY RIGHTS. SMSC DISCLAIMS AND EXCLUDES ANY AND ALL WARRANTIES AGAINST INFRINGEMENT AND THE LIKE.

No license is granted by SMSC expressly, by implication, by estoppel or otherwise, under any patent, trademark, copyright, mask work right, trade secret, or other intellectual property right.

**To obtain this software program the appropriate SMSC Software License Agreement must be executed and in effect. Forms of these Software License Agreements may be obtained by contacting SMSC.

Block Diagram

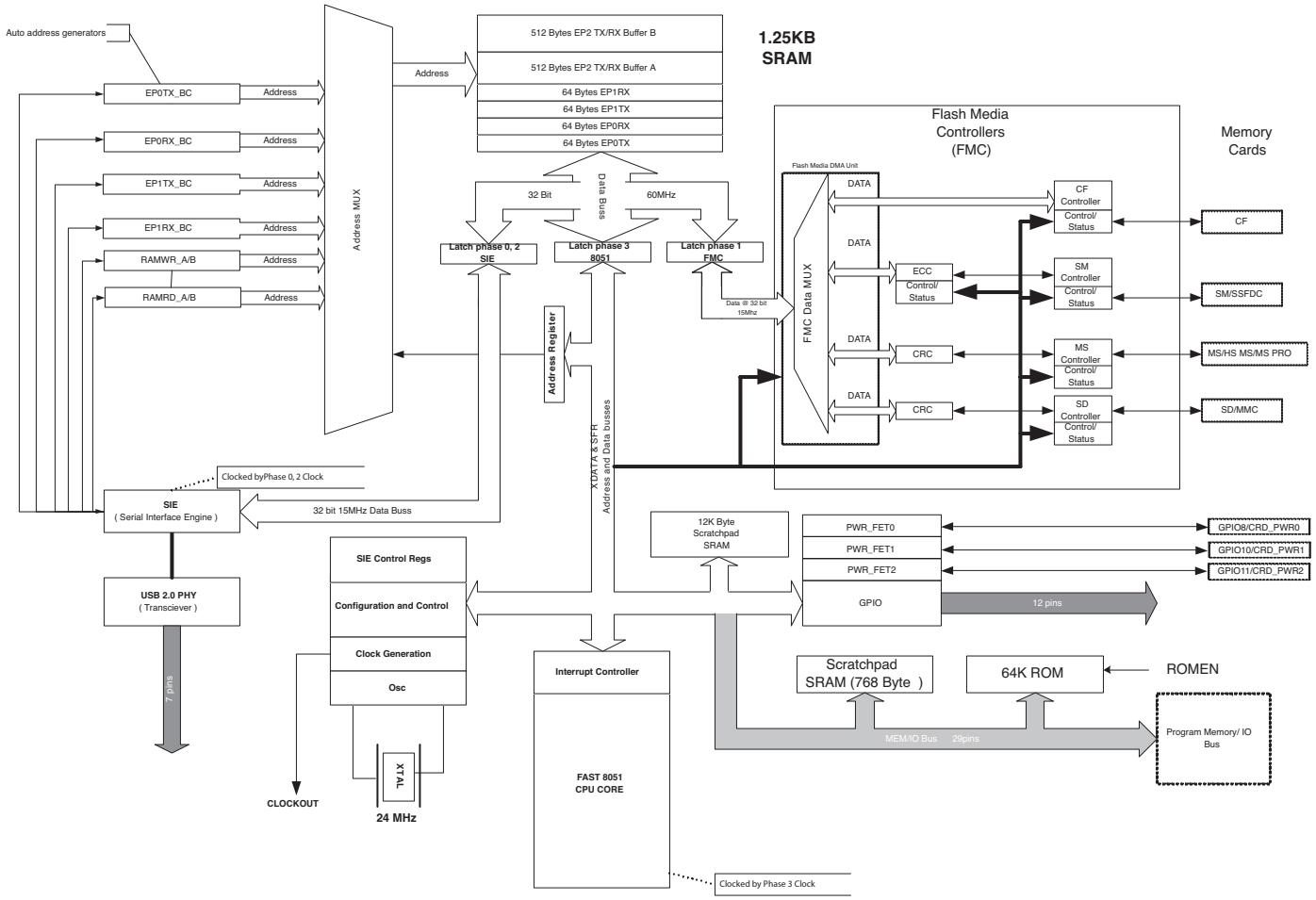

Figure 1 USB2227/USB2228 Block Diagram

Package Outlines

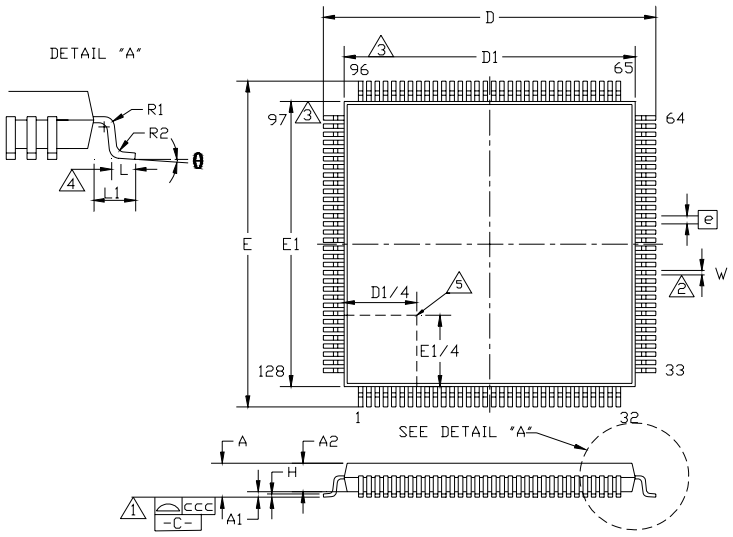

Figure 2 USB2227/USB2228 128-Pin VTQFP Package Outline

Table 1 USB2227/USB2228 128-Pin VTQFP Package Parameters

	MIN	NOMINAL	MAX	REMARKS
A	~	~	1.20	Overall Package Height
A1	0.05	~	0.15	Standoff
A2	0.95	~	1.05	Body Thickness
D	15.80	~	16.20	X Span
D1	13.80	~	14.20	X body Size
E	15.80	~	16.20	Y Span
E1	13.80	~	14.20	Y body Size
H	0.09	~	0.20	Lead Frame Thickness
L	0.45	0.60	0.75	Lead Foot Length
L1	~	1.00	~	Lead Length
e	0.40 Basic			Lead Pitch
q	0°	~	7°	Lead Foot Angle
W	0.13	0.18	0.23	Lead Width
R1	0.08	~	~	Lead Shoulder Radius
R2	0.08	~	0.20	Lead Foot Radius
ccc	~	~	0.08	Coplanarity

Notes:

1. Controlling Unit: millimeter.
2. Tolerance on the true position of the leads is ± 0.035 mm maximum.
   Package body dimensions D1 and E1 do not include the mold protrusion.
3. Maximum mold protrusion is 0.25 mm.
4. Dimension for foot length L measured at the gauge plane 0.25 mm above the seating plane.
5. Details of pin 1 identifier are optional but must be located within the zone indicated.